Garmin Trasom Mount for Panoptix LVS32

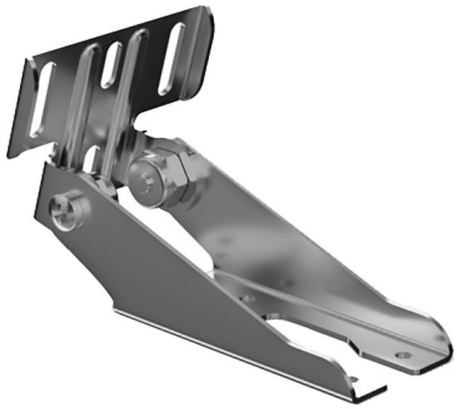

Product price:

£34.99 tax included

Product codes:

Reference: 230-0101278402
EAN13: 00753759207830
UPC: - MPN: 010-12784-02

Product short description:

Easily attach your compatbile Panoptix transducer to the transom of your boat with this stainless steel mount.