Quick SF Stressfree Capstan - Mini Extra Wide 500W No Free Fall

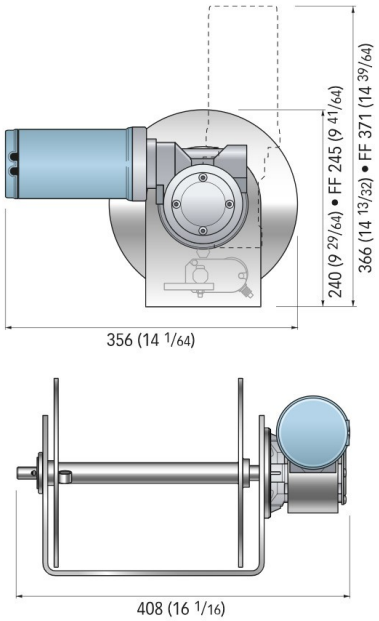

Product price:

£2,922.16 tax included

Product codes:

Reference: 690-FSSFMNW00512A00
EAN13: 08057090075144
UPC: - MPN: FSSFMNW00512A00

Product short description:

The SF Stressfree series capstan is just like having an extra crew member tending the anchor for you raising and lowering your anchor quickly safely and effortlessly. There is no need to tie off your anchor rope no racing down to the bow to drop or raise the anchor. No tangled rope and chain in the anchor well. No strained back or frustrated amateur crew.