# Quick SF Stressfree Capstan - Midi 1400W With Free Fall

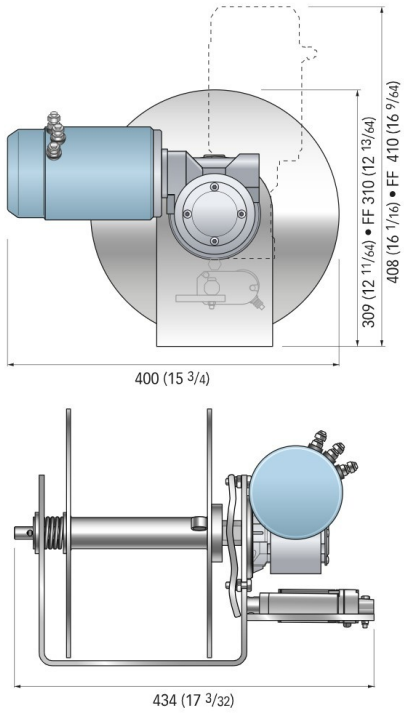


**Product price:**

## £4,028.16 tax included

**Product codes:**

Reference: 690-FSSFMDFF1412A00
EAN13: 08057090075090
UPC: - MPN: FSSFMDFF1412A00

**Product short description:**

The SF Stressfree series capstan is just like having an extra crew member tending the anchor for you raising and lowering your anchor quickly safely and effortlessly. There is no need to tie off your anchor rope no racing down to the bow to drop or raise the anchor. No tangled rope and chain in the anchor well. No strained back or frustrated amateur crew.