Quick Dylan DH4 HYDRO Windlass - 10mm (3/8\") Hydraulic No Drum

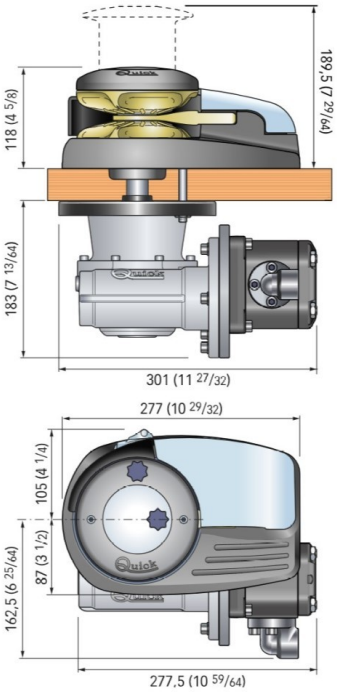

Product price:

£3,191.44 tax included

Product codes:

Reference: 690-FSDHHY000010A00
EAN13: 08057090085747
UPC: - MPN: FSDHHY000010A00

Product short description:

The DH4 is a vertical application windlass perfect for boats with limited deck space. Comes in different variations with or without the drum capstan for rope retrieval as well as various gypsy sizes for rope or chain retrieval. High power watertight AC or DC Motors and a Hydrualic power option.