Quick Dylan DH4 AC3000D Windlass - 10mm (3/8\") 3000W 230/400V With Drum

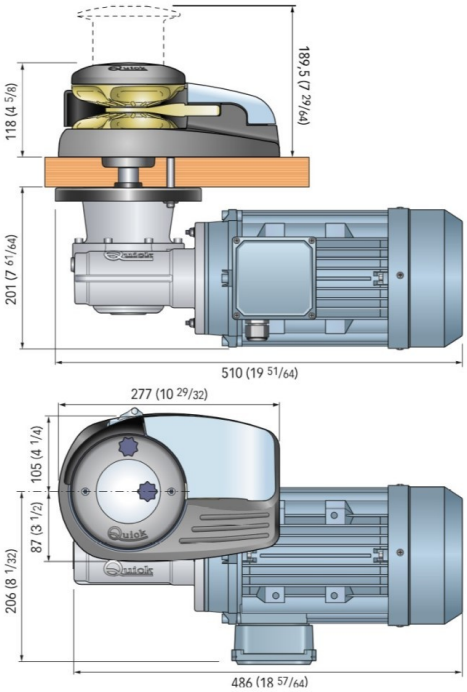

Product price:

£3,665.90 tax included

Product codes:

Reference: 690-FSDH30TRD010A00
EAN13: 08057090085723
UPC: - MPN: FSDH30TRD010A00

Product short description:

The DH4 is a vertical application windlass perfect for boats with limited deck space. Comes in different variations with or without the drum capstan for rope retrieval as well as various gypsy sizes for rope or chain retrieval. High power watertight AC or DC Motors and a Hydrualic power option.