Quick Dylan DH4 AC3000 Windlass - 12-13mm 3000W 230/400V No Drum

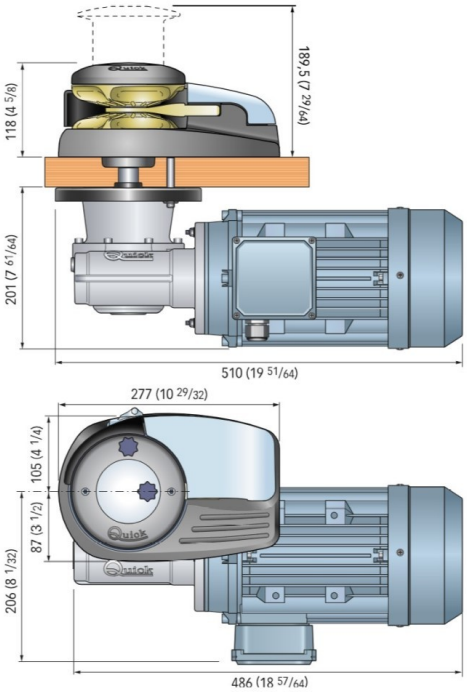

Product price:

£3,394.48 tax included

Product codes:

Reference: 690-FSDH30TR0012A00
EAN13: 08057090085716
UPC: - MPN: FSDH30TR0012A00

Product short description:

The DH4 is a vertical application windlass perfect for boats with limited deck space. Comes in different variations with or without the drum capstan for rope retrieval as well as various gypsy sizes for rope or chain retrieval. High power watertight AC or DC Motors and a Hydrualic power option.